600W Halfbridge LLC Evaluation Board

EVAL_600W_LLC_12V_C7

SP001359852 // SA001370212

Di Domenico Francesco (IFAT PMM ACDC AE)
Zechner Florian (IFAT PMM ACDC AE)

Table of Contents

I General Description

II Efficiency Results

III Design Concept

Table of Contents

I General Description

II Efficiency Results

III Design Concept

General

Description:

The **"EVAL_600W_LLC_12V_C7"** - Evaluation Board shows how to design a Halfbridge LLC stage of a Server SMPS with the target to meet **80+ Titanium Standard** efficiency requirements. On this purpose there has been applied latest CoolMOS™ technology IPP60R180C7 600V Power MOSFET on the primary side and OptiMOS™ Low Voltage Power MOSFET in SuperSO8 BSC010N04LS in the synchronous rectification secondary stage, in combination with QR CoolSET™ ICE2QR2280Z, Hi-Low Side Driver 2EDL05N06PF, Low Side Gate Driver 2EDN7524F and analog LLC Controller ICE2HS01G.

Summary of Features:

- Output voltage: 12V
- Output current: 50A
- Peak efficiency @ 50% load > 97,8%
- Efficiency @ 10% load > 95%

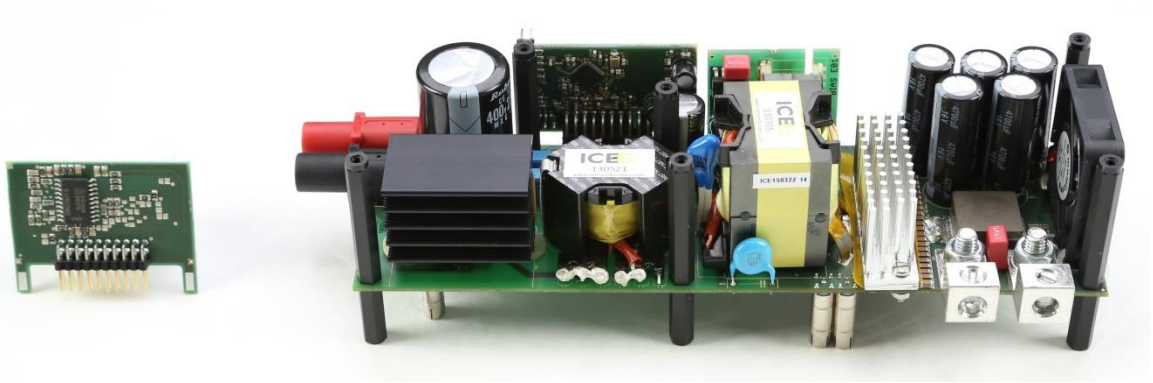

The following variants are available:

- 600W 12V LLC **analog** version with CoolMOS™ C7, IPP60R180C7 , EVAL_600W_LLC_12V_C7

Copyright © Infineon Technologies AG 2014. All rights reserved.

Example of System Understanding: Infineon Demo Solution for Titanium HV DC/DC stage

Half Bridge LLC with synchronous rectification in center tap configuration	
V_{in}	350-410 V_{DC}
V_{in_nom}	380 V_{DC}
V_{out_nom}	12 V_{DC}
I_{out}	50 A
P_o	600 W
$f_{res}=f_0$	157 kHz
f_{min}	90 kHz
f_{max}	210 kHz
Transformer turns ratio	16:1
C_r	66 nF
L_r	15.5 uH
L_m	195 uH

Primary HV MOSFETs
- **CoolMOS™ IPP60R180C7**

Reduced Gate Charge (Q_g)
- Reduced E_{off}
- High body diode ruggedness

SR MOSFETs
- **OptiMOS™ BSC010N04LS**
- New generation
- Best FOM $R_{DS(on)}$ x Q_g
- Best FOM $R_{DS(on)}$ x Q_{oss}

HB Gate Drive IC
2EDL05N06PF
Non isolated LS Gate Drive
2EDN7524F
LLC controller
Analog ICE2HS01G

Bias QR Flyback controller
ICE2QR2280Z

SR MOSFETs
BSC010N04LS

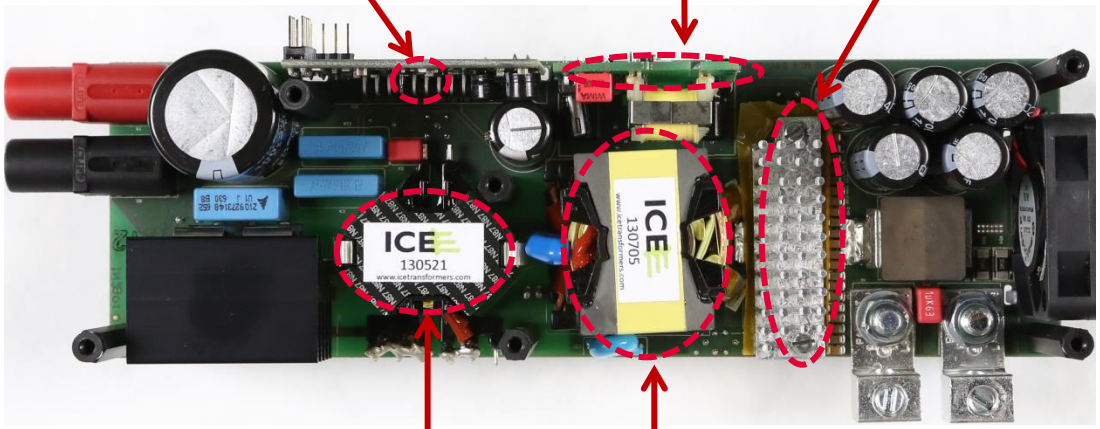

Resonant inductor
RM12 core

Transformer
PQ35/35 core

Copyright © Infineon Technologies AG 2014. All rights reserved.

Control Board Analog

Infineon`s 600W LLC Evaluation Board with analog control

Analog

ICE2HS01G

- Resonant mode controller for Half-bridge LLC resonant converter with synchronous rectification drives
- Driving signal for synchronous rectification which support full operation of Half-bridge LLC resonant converter
- 20-pin DSO package
- 30kHz to 1MHz switching frequency
- 50% duty cycle for both primary and secondary gate drives
- Adjustable dead time with high accuracy

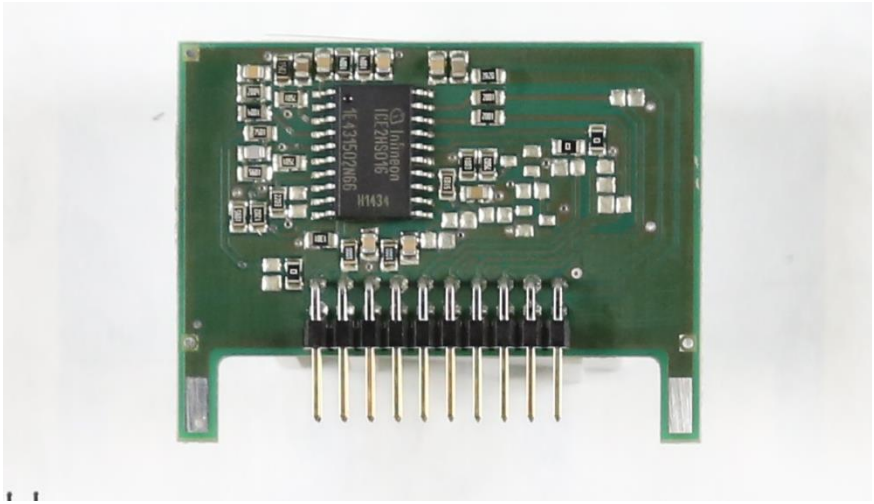

Copyright © Infineon Technologies AG 2015. All rights reserved.

PCB Boards Layout: Main Power Board and Control and Bias Daughter Boards

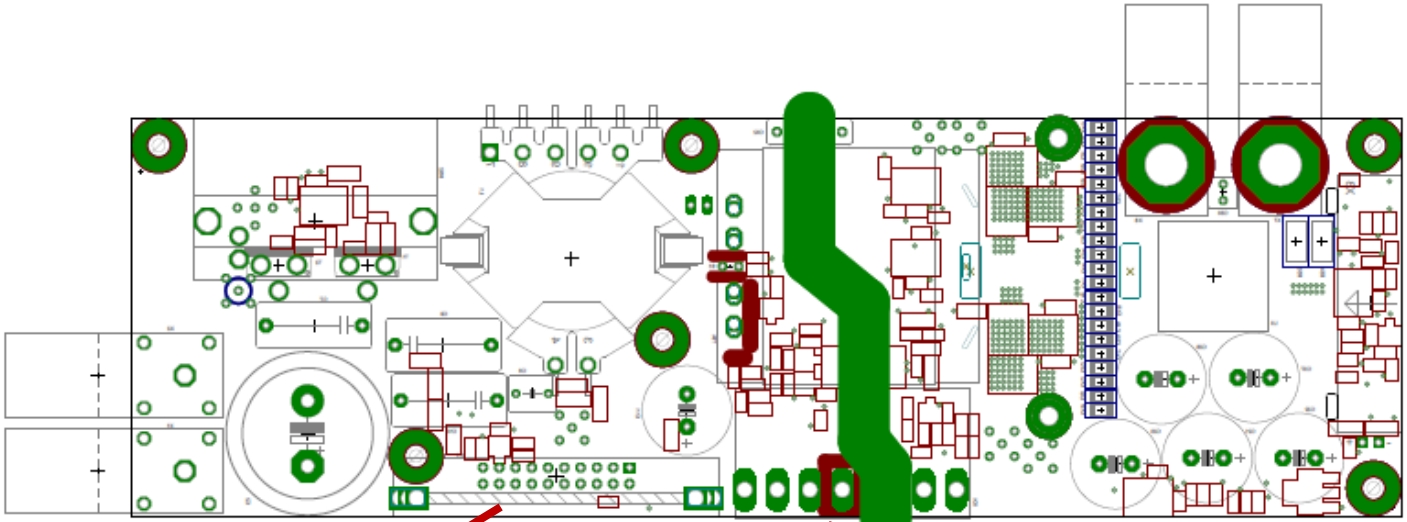

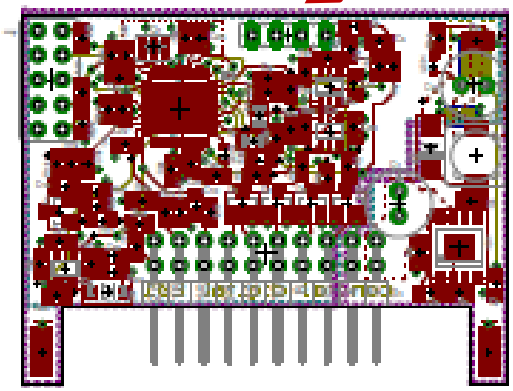

Controller Board

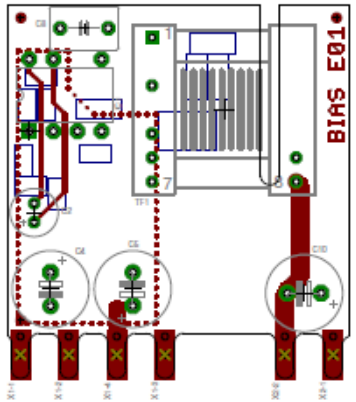

Bias Board

- Power Density>20W/inch^3

Copyright © Infineon Technologies AG 2014. All rights reserved.

Main Power Board Schematic

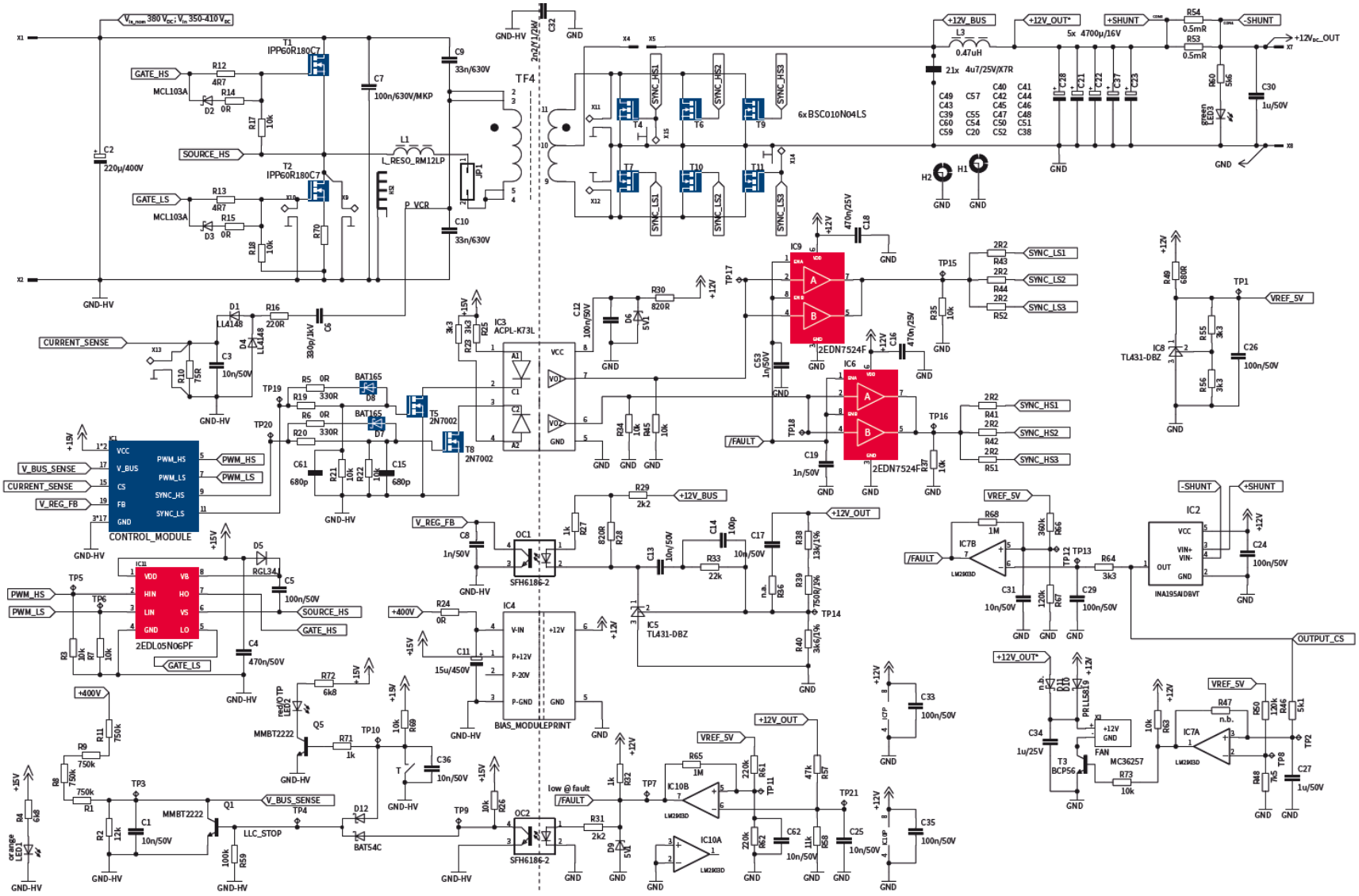

Copyright © Infineon Technologies AG 2014. All rights reserved.

Bias Board Schematic

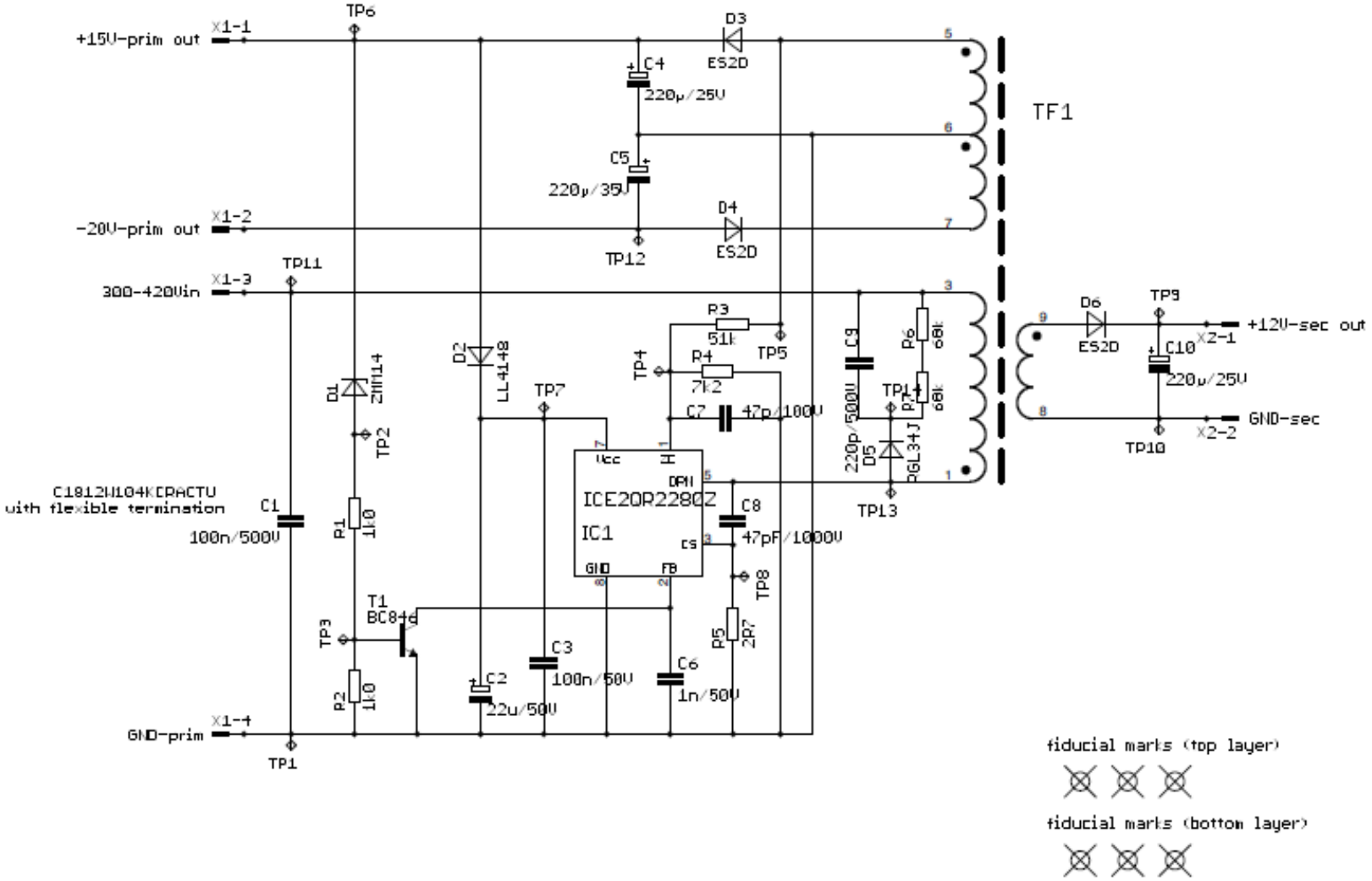

Copyright © Infineon Technologies AG 2014. All rights reserved.

Analog Control Board Schematic

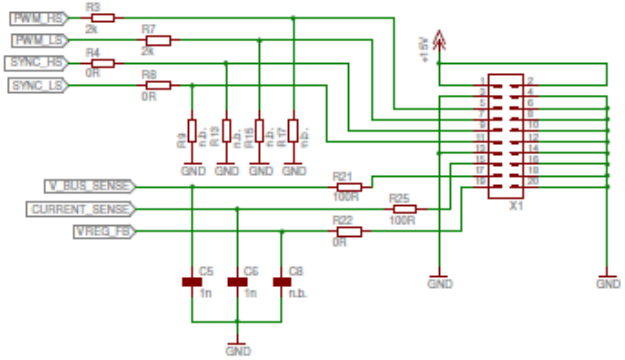





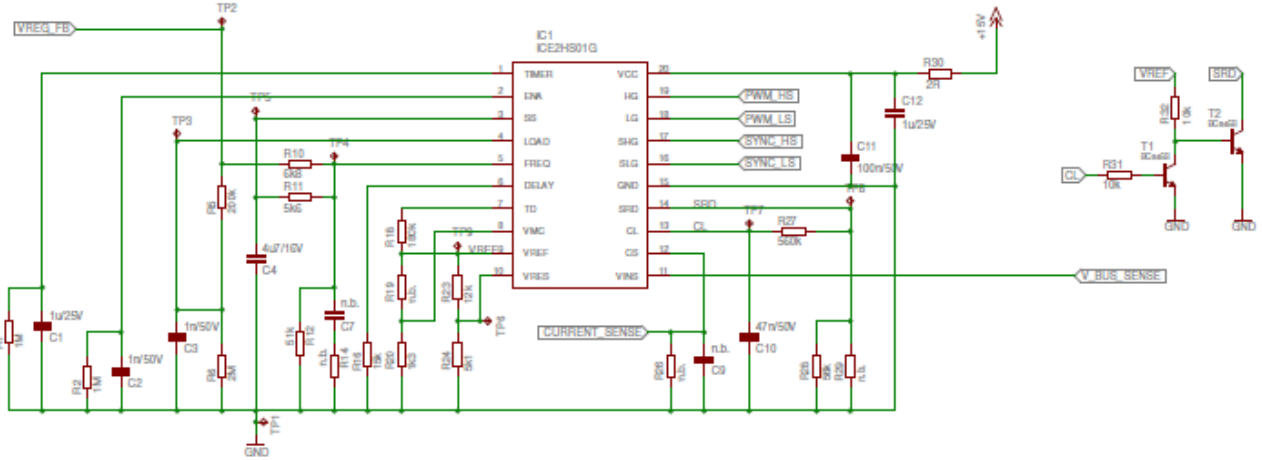

Copyright © Infineon Technologies AG 2014. All rights reserved.

PCB structure

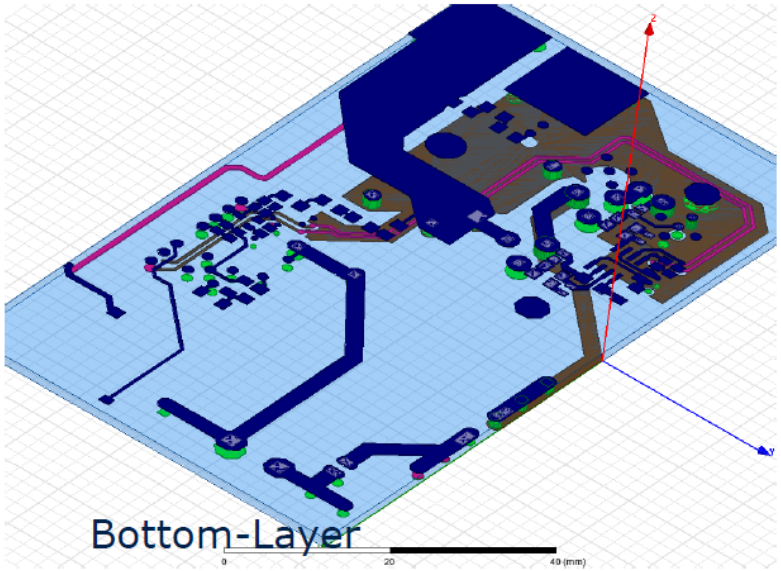

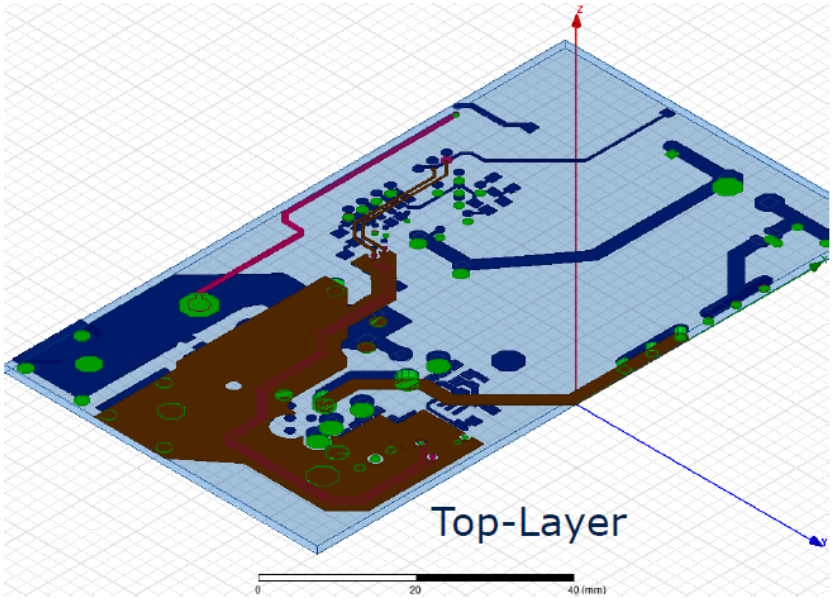

PCB-Stackup

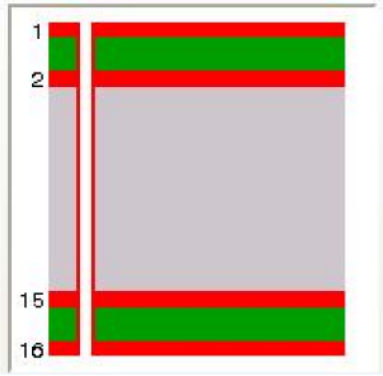

Nr	Copper	Isolation
1	0.07mm	0.15mm
2	0.07mm	0.93mm
15	0.07mm	0.15mm
16	0.07mm	

Gesamt: 1.51mm

Copyright © Infineon Technologies AG 2014. All rights reserved.

Table of Contents

I General Description

II Efficiency Results

III Design Concept

Automated Efficiency Measurement

Combination of converter design (resonant tank, transformer) and proper HV device election

Proper selection of SR LV device and secondary side design

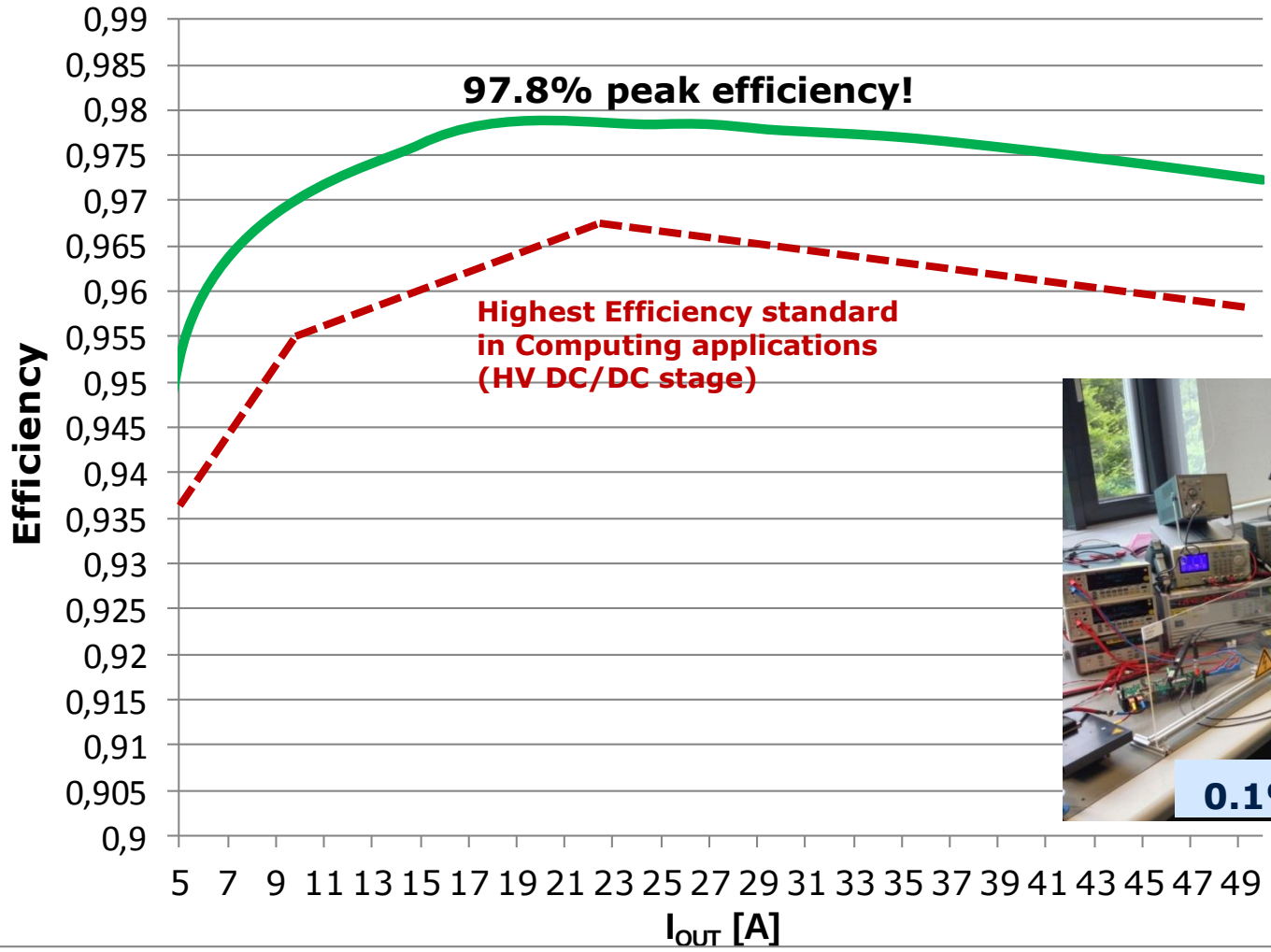

- Output Voltage: 12 V_{DC}
- Output Current: 50 A
- Efficiency: > 95% @ 10% load, V_{in} = 380 V_{DC}
- Efficiency max: 97.8%, V_{in} = 380 V_{DC}

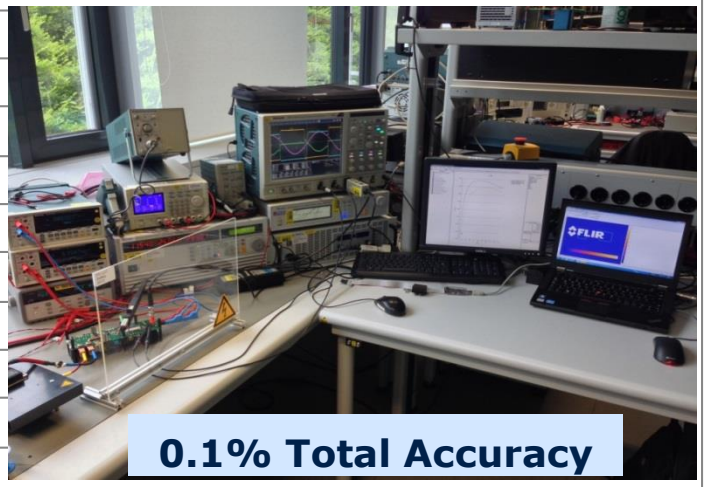

Copyright © Infineon Technologies AG 2014. All rights reserved.

Table of Contents

I General Description

II Efficiency Results

III Design Concept

Design Procedure: Input Data

$$n = \frac{V_{in_nom}}{2 \cdot V_{out_nom}}$$

$$M_{\min} \equiv K_{\min}(Q, m, F_x) = \frac{n \cdot V_{o_\min}}{V_{in_\max}/2}$$

$$M_{\max} \equiv K_{\max}(Q, m, F_x) = \frac{n \cdot V_{o_\max}}{V_{in_\min}/2}$$

Copyright © Infineon Technologies AG 2014. All rights reserved.

Resonant Tank Components and Related Resonant Frequencies

- $n=V_{in_nom}/(2xV_o)=380/(2*12)\approx16$
- $L_m=195\mu H$
- $L_r=15.5\mu H$
- $L_n=L_m/L_r=12.5$
- $C_r=66nF$

$$fo=\frac{1}{2\pi\cdot\sqrt{Lr\cdot Cr}}=157kHz$$

$$fp=\frac{1}{2\pi\cdot\sqrt{(Lr+Lm)\cdot Cr}}=42.7kHz$$

Copyright © Infineon Technologies AG 2014. All rights reserved.

Gain Curves

DC - gain curve (600W LLC hardware revision C7)

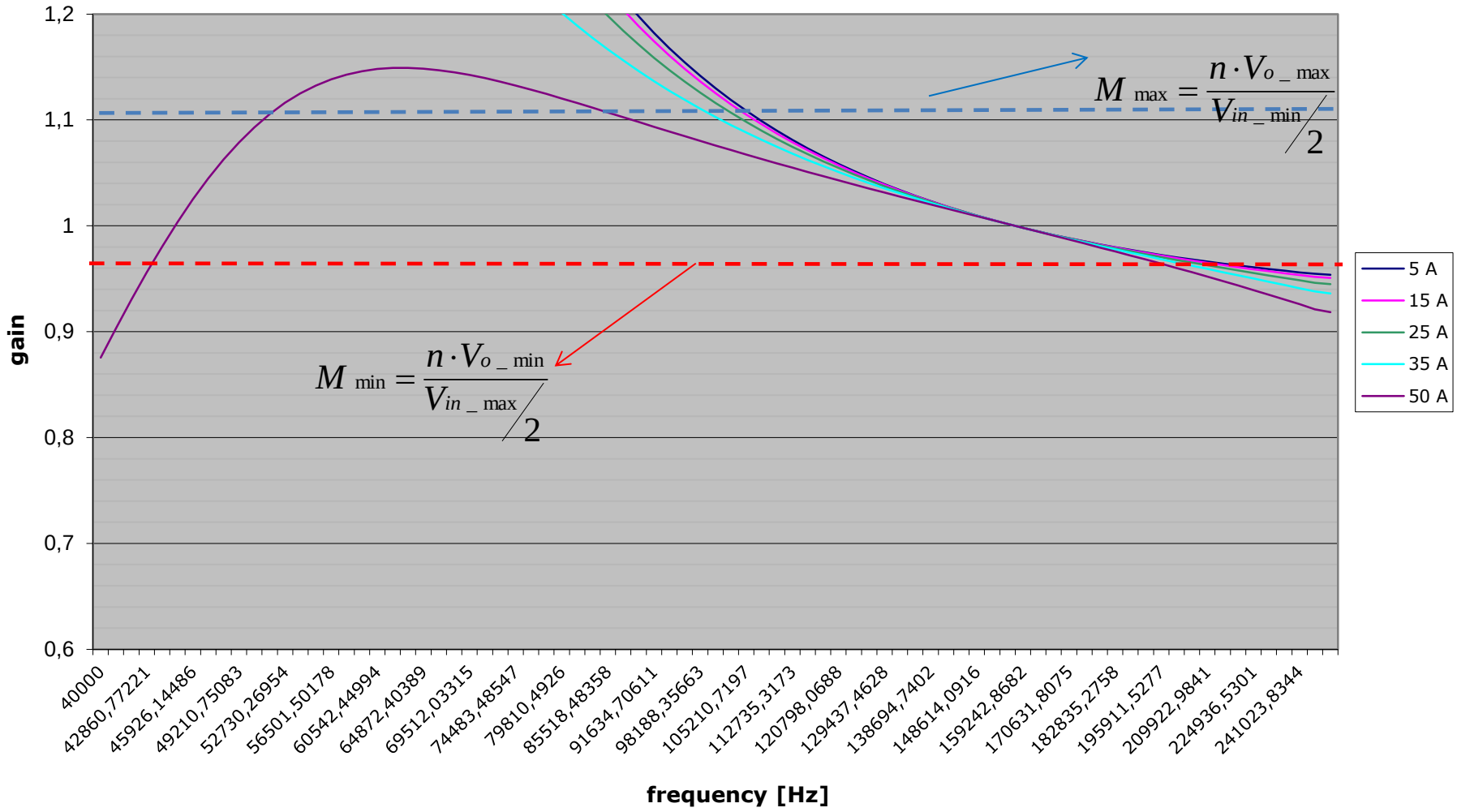

Copyright © Infineon Technologies AG 2014. All rights reserved.

Energy Related Calculations (Ref. IPP60R180C7 Device Parameters)

$$I_{m\,ag_min} = \frac{2\cdot\sqrt{2}}{\pi}\cdot\frac{n\cdot V_o}{2\pi\cdot f_{sw_max}\cdot L_m} = 0.672\ A$$

$$En_{res_min} = \frac{1}{2}\cdot(L_m + L_r)\cdot I^2_{mag_min} = 95.1\ \mu J$$

$$En_{cap_max} = \frac{1}{2}\cdot(2Co(er))\cdot V^2_{DS_max} \approx 9\ \mu J$$

$$\Rightarrow \quad En_{res_min} > En_{cap_max}$$

Copyright © Infineon Technologies AG 2014. All rights reserved.

Q_{oss}, $I_{mag,pk}$, $t_{dead,min}$, t_{ecs} Relationship

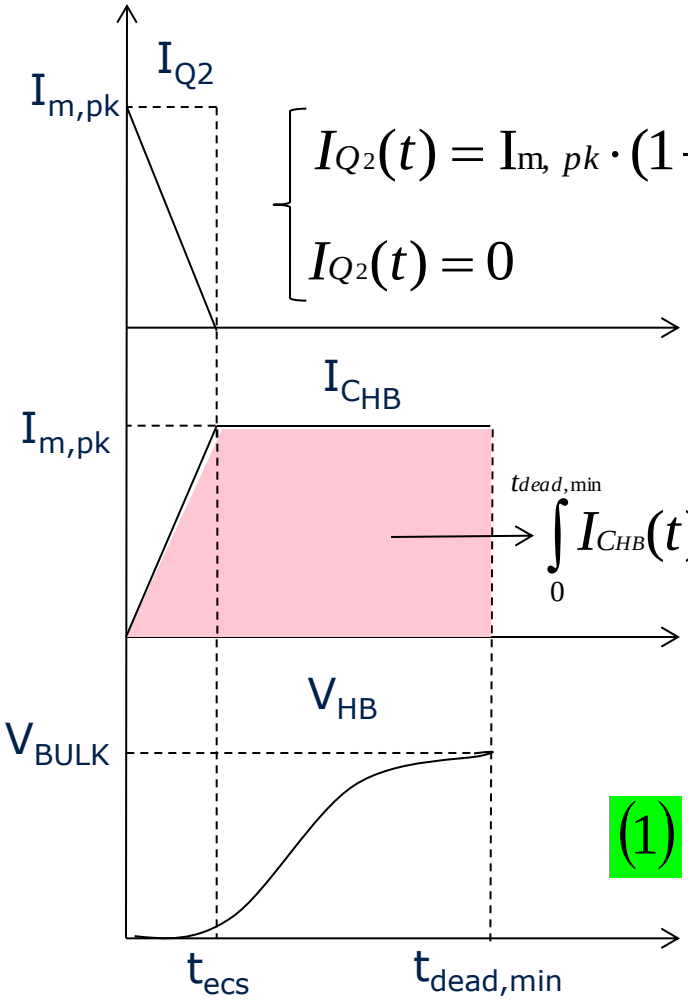

$$\begin{cases} I_{Q2}(t) = \mathrm{I}_{m,\ pk} \cdot (1 - \dfrac{t}{t_{ecs}}) & \forall t \le t_{ecs} \\ I_{Q2}(t) = 0 & \forall t \ge t_{ecs} \end{cases}$$

$$t_{ecs} = f(R_{g,\,tot}, V_{gs,\,th}, \frac{C_{ds}}{C_{gd}})$$

$$\int_0^{t_{dead,\,\min}} I_{CHB}(t)dt = \frac{1}{2} \cdot \mathrm{I}_{m,\ pk} \cdot t_{ecs} + \mathrm{I}_{m,\ pk} \cdot (t_{dead,\,\min} - t_{ecs}) = 2 \cdot Qoss,_{@\ 400\,V}$$

$$(1)\quad t_{dead,\,\min} = \frac{t_{ecs}}{2} + \frac{2 \cdot Q_{oss,\,@\,400\,V}}{\mathrm{I}_{m,\ pk}}$$

Copyright © Infineon Technologies AG 2014. All rights reserved.

Time Related Calculations (Ref. IPP60R180C7 Device Parameters)

$$I_{m\,ag_min} = \frac{2\cdot\sqrt{2}}{\pi}\cdot\frac{n\cdot V_o}{2\pi\cdot f_{sw_max}\cdot L_m} = 0.672\,A$$

$$I_{m\,ag_max} = \frac{2\cdot\sqrt{2}}{\pi}\cdot\frac{n\cdot V_o}{2\pi\cdot f_{sw_min}\cdot L_m} = 1.66\,A$$

$$t_{dead,\,min} = \frac{t_{ecs}}{2} + \frac{2\cdot Q_{oss,\,@\,400V}}{I_{m\,ag,\,max}} \approx 130\,n\mathrm{sec}$$

$$t_{dead,\,max} = \frac{t_{ecs}}{2} + \frac{2\cdot Q_{oss,\,@\,400V}}{I_{m\,ag,\,min}} \approx 311\,n\mathrm{sec}$$

Copyright © Infineon Technologies AG 2014. All rights reserved.

Main Transformer Structure: PQ35/35 Core with TDK PC95 Ferrite Material

Wind.	Conductor	N°. of Turns		Rotat.	Output pin	Winding layer	N°. layer	Sleeves Col.	Ref. M.L.	Total length mm.	Free length mm.	Notes
N1a	2xLitz 90x0.10 Ref.3	0 8		+	2–3 *	8	1	Re Re	8 8	20 20	/ /	2 wires in 1 sleeve.
Insulation: 3 turns of polyester adhesive tape Ref.6												
N2 N3	Copper foil 0.50x0.20 Ref.4	0 1		+	A B C	1	1	/ /	/ /	/ /	/ /	
Insulation: 1 turns of polyester adhesive tape Ref.6 + 1 piece as showed in pictures												
N1b	2xLitz 90x0.10 Ref.3	0 8		+	* 4–5	8	1	Re	8	20	/	2 wires in 1 sleeve. Don't need correspondence
Insulation: 3 turns of polyester adhesive tape Ref.6												

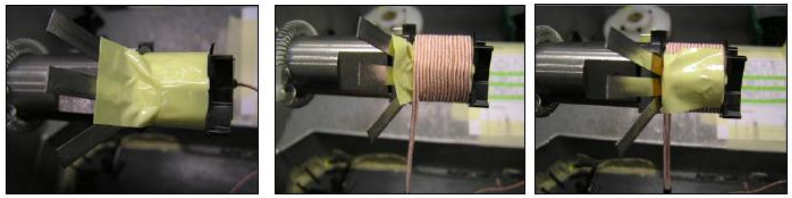

Insert piece of tape after the insulation of N2–N3. Wind N1b. Refold tape, block and connect the wires to pin

Copper foil preparation

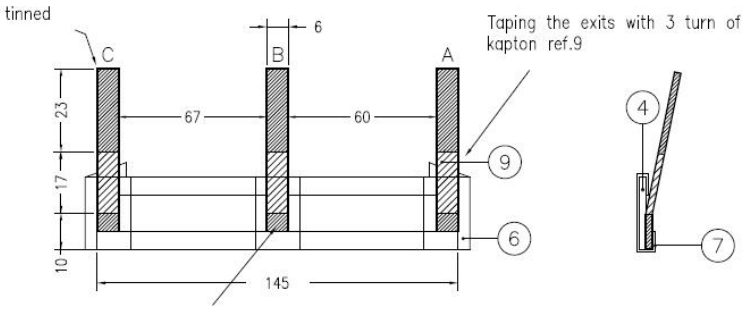

Solder the exits A–B–C ref. 5 on copper foil ref.4

Insulate the foil with tape ref.7 and the welding with tape ref.6

finished part



Positioning coilformer – pin side

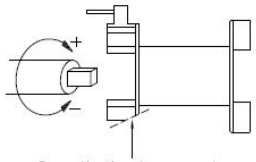

Bottom view

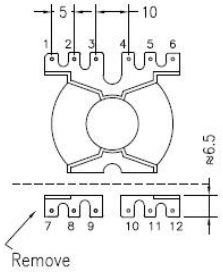

Electrical diagram

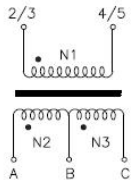

REV	APPR DATE	REF. MOD.	DESCRIPTION OF MODIFICATION	EDITING	CHECKING AND APPROVAL
02	21.07.15		Inserted label and pictures	C. Picciani	D. Di Giorgio
01	24.01.14		Release	C. Picciani	D. Di Giorgio

I.C.E. TRANSFORMERS

DESCRIPTION	Trasformatore PQ35/35 600W LLC converter (130705)			
Mod. AQ 05.09	DOCUMENT TYPE	CODE	REVISION	RELEASE DATE	PAGE
	P.F.	8065.0703.001	02	24.01.14	1of2

Copyright © Infineon Technologies AG 2014. All rights reserved.

Resonant Choke:
RM12 Core, Material N87

Wind.	Conductor type	N. of windings	Rotat.	output pin	Winding Layer	N. of Layer	Tube Color	Tube Ref.	Tube Length mm	Notes
N1	Litz 120x0.10 Ref. 4	0 9	+	7+8+9 10+11	9	1	/ Red	/ 6	/ 20	Perpendicular crossing on tape ref.5
Insulation: 2 turns polyester tape Ref.5										

Bill of materials

Ref.	Description
1	Coil Former RM12 12pins (B65816-C1512-T1 Epcos mat.Valox420 E45329)
2	Ferrite core RM12 gap 1.1mm (B65815-R87 Epcos)
3	RM12 clamp (B65816-A2002 Epcos)
4	Litz wire 120x0.100mm G1 (155°C E125660 or equivalent)
5	Polyester adhesive tape H=16mm thickness 0.06mm (P31 E178430 or equivalent)
6	Tube glass/silicone Ø1.5mm 4KV 20mm (GVES2500 E311983 or equivalent)
7	Activator for epoxy resin (IN1005 or equivalent)
8	Epoxy resin (36T or equivalent)
9	PVC label 24x12mm
10	Insulating varnish classH (AC43 E317427 or equivalent)
11	Polyestere label 4.7x14mm (7816 MH16411 or equivalent)

Winding rotation

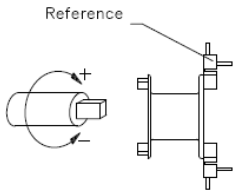

Bottom View

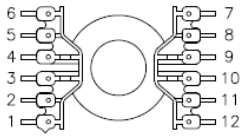

Electrical drawing

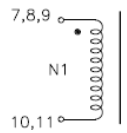

Assembling

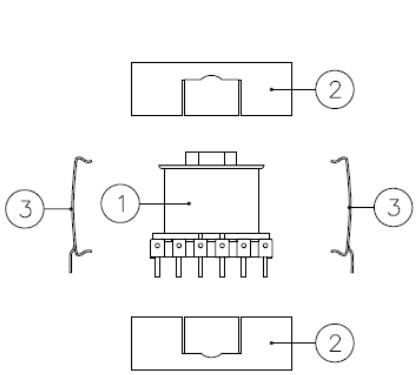

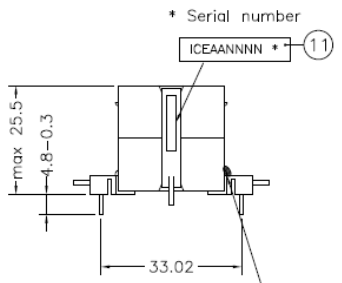

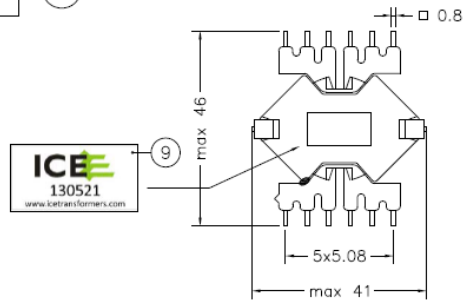

Varnish with ref.10

Dimensions in millimeter
RoHS compliant

N°.	Test type	Electrical test: Test conditions	Limits
1	Inductance	7+8+9-10+11 @ 10 kHz - 100 mV	from 11.9 to 16.1 µH

REV	Appr. date	Ref. Mod.	Modification description	Editing	Checked and Approved
02	21.07.15		Inserted new label	C. Picciani	D. Di Giorgio
01	23.01.14		Release	C. Picciani	D. Di Giorgio

I.C.E. TRANSFORMERS Mod. AQ 05.09

DESCRIPTION	DOCUMENT TYPE	CODE	REVISION	EMISSION DATE	PAGE
Inductance RM12 LLC resonant choke (130521)	P.F.	8017.0901.012	02	23.01.14	1 of 1

Copyright © Infineon Technologies AG 2014. All rights reserved.

Evaluation Board
EVAL_600W_12V_LLC_C7

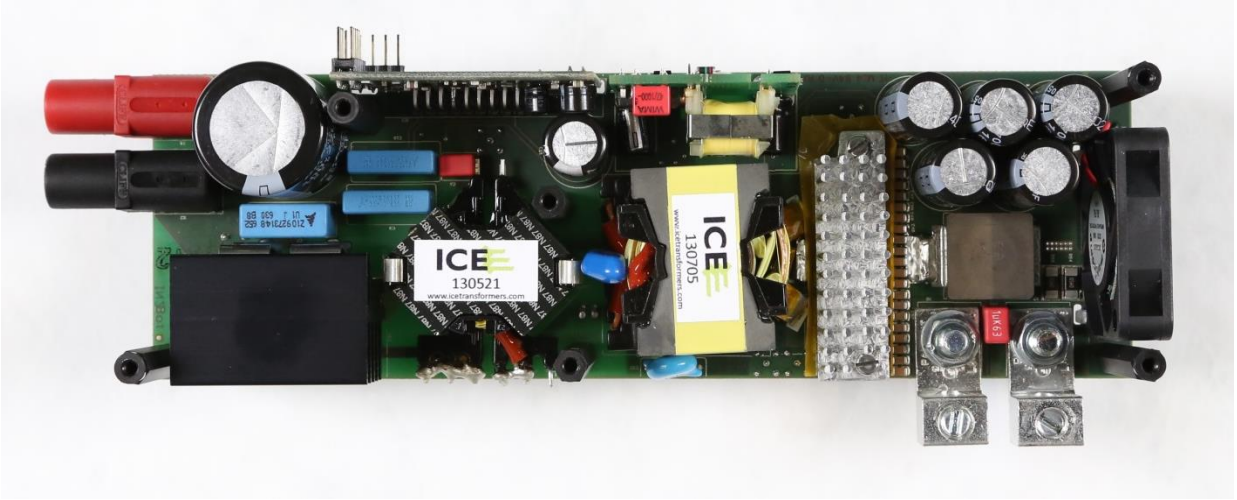

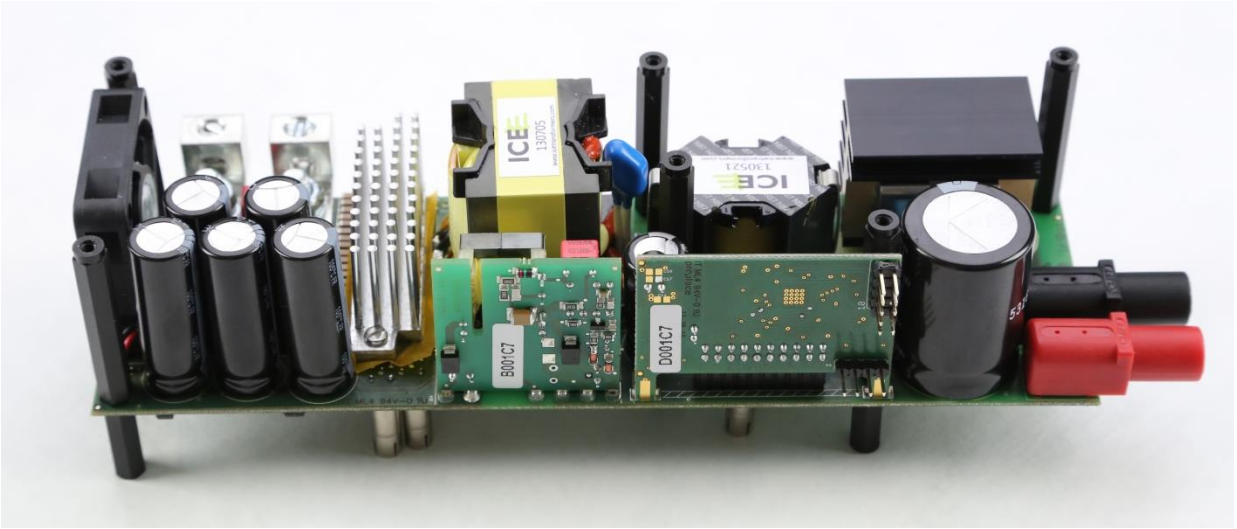



Copyright © Infineon Technologies AG 2014. All rights reserved.

Support Slides
600W LLC Evaluation Board

Evaluation Board Page

- Technical Description
- Datasheets
- Parameters
- Related material
- Videos

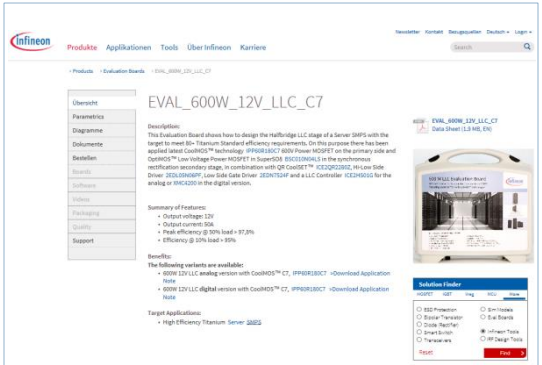

- EVAL_600W_12V_LLC_C7

Product Family Pages

- Product Brief
- Application Notes
- Selection Guides
- Datasheets and Portfolio
- Videos
- Simulation Models

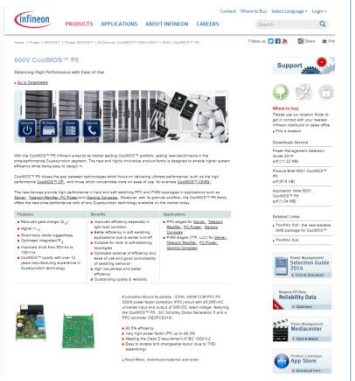

- 650V CoolMOS™ C7
- XMC 32-Bit Industrial Microcontroller
- Resonant Mode Controller
- OptiMOS™ 5 40V and 60V

Copyright © Infineon Technologies AG 2014. All rights reserved.



Part of your life. Part of tomorrow.

24.05.2017

Copyright © Infineon Technologies AG 2015. All rights reserved.